SMA Male RG58, RG223, RG 400, LMR195, LMR200

P.N. : A01-M1101-01

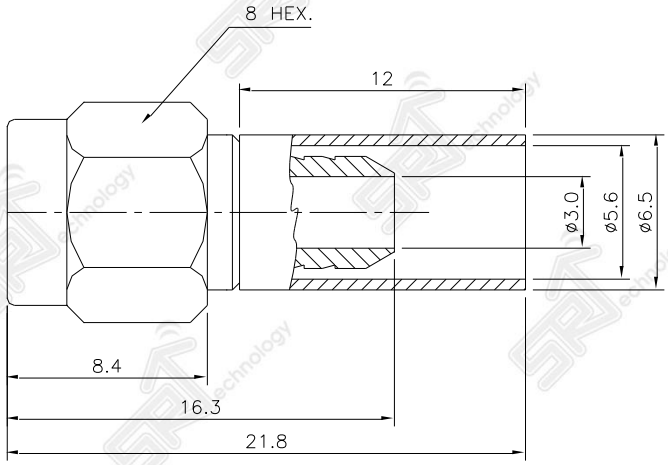

Electrical Specification

Item	Specification
Frequency range	DC~11GHz
Impedance	50 Ω
VSWR	1.15 + 0.02 x f
Insertion Loss	0.05dB
Insulation Resistance	5,000 MΩ Min
RF Leakage	-60dBm Min., 2~3GHz
Interface	MIL-C-39012
Vibration	MIL-STD-202
Shock	MIL-STD-202
Durability	500 Mating
Coupling Nut Torque	12 Ncm – 170 Ncm
Temperature	-65°C ~ +85°C
RoHS	Compliance

Material specification

Item	Specification
Body & Coupling Nut	Brass / Gold plating
Center contact	Brass / Gold plating
Insulator	PTFE
Cable Type	RG58, RG223,RG400, LMR195, LMR200

Tel : (+82)2- 866 -9003
Fax : (+82)2-6280-9333
www.srtechnology.com
sale@srtechnology.com

This above specification can be changed without prior notification.